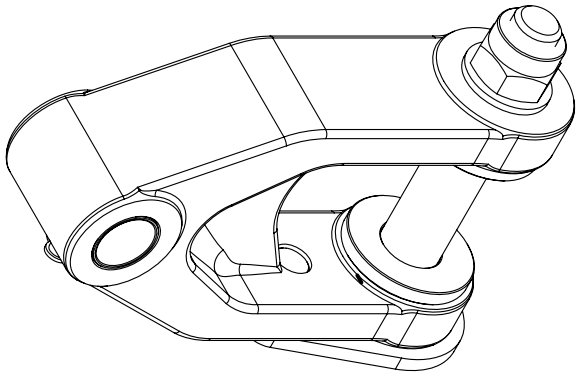

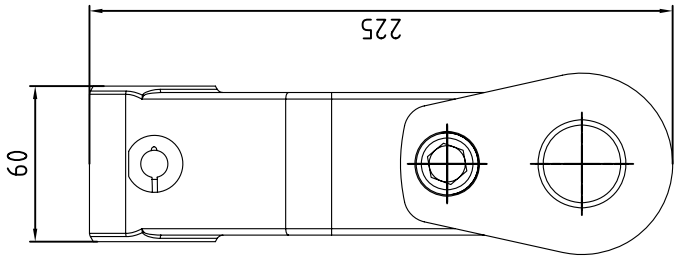

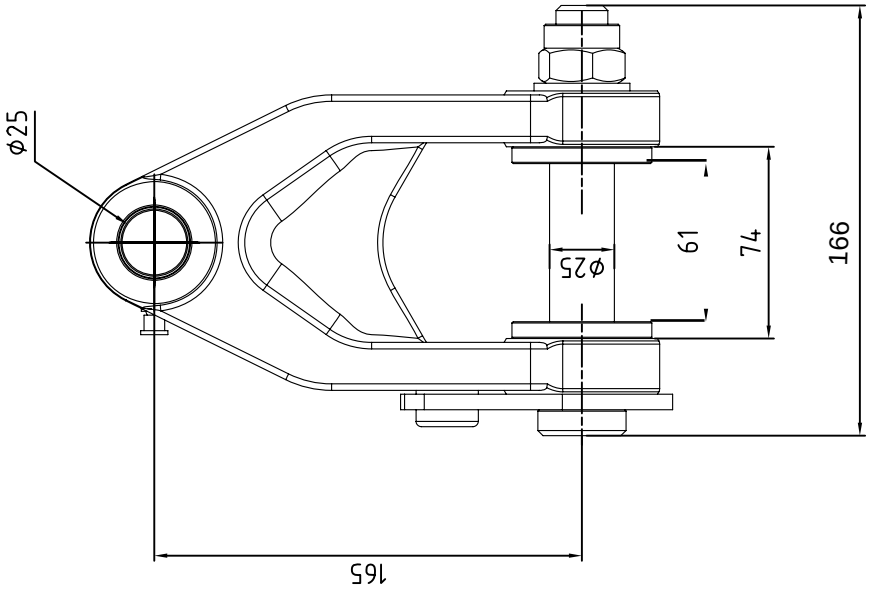

Xibeiyu Industry Zone, Laizhou, Shandong, China
Tel:+(86)-186 6387 9840 Fax:+(86)-535-6805690
E-mail:info@rimamach.com